INTERNATIONAL STANDARD

ISO 14253-1

Third edition
2017-10

Geometrical product specifications (GPS) — Inspection by measurement of workpieces and measuring equipment —

Part 1:
Decision rules for verifying conformity or nonconformity with specifications

Spécification géométrique des produits (GPS) — Vérification par la mesure des pièces et des équipements de mesure —

Partie 1: Règles de décision pour contrôler la conformité ou la non-conformité à la spécification

Reference number
ISO 14253-1:2017(E)

ISO copyright office
Ch. de Blandonnet 8 • CP 401
CH-1214 Vernier, Geneva, Switzerland
Tel. +41 22 749 01 11
Fax +41 22 749 09 47
copyright@iso.org
www.iso.org

Contents

Page

Foreword

ISO (the International Organization for Standardization) is a worldwide federation of national standards bodies (ISO member bodies). The work of preparing International Standards is normally carried out through ISO technical committees. Each member body interested in a subject for which a technical committee has been established has the right to be represented on that committee. International organizations, governmental and non-governmental, in liaison with ISO, also take part in the work. ISO collaborates closely with the International Electrotechnical Commission (IEC) on all matters of electrotechnical standardization.

The procedures used to develop this document and those intended for its further maintenance are described in the ISO/IEC Directives, Part 1. In particular the different approval criteria needed for the different types of ISO documents should be noted. This document was drafted in accordance with the editorial rules of the ISO/IEC Directives, Part 2 (see www.iso.org/directives).

Attention is drawn to the possibility that some of the elements of this document may be the subject of patent rights. ISO shall not be held responsible for identifying any or all such patent rights. Details of any patent rights identified during the development of the document will be in the Introduction and/or on the ISO list of patent declarations received (see www.iso.org/patents).

Any trade name used in this document is information given for the convenience of users and does not constitute an endorsement.

For an explanation on the voluntary nature of standards, the meaning of ISO specific terms and expressions related to conformity assessment, as well as information about ISO's adherence to the World Trade Organization (WTO) principles in the Technical Barriers to Trade (TBT) see the following URL: www.iso.org/iso/foreword.html.

This document was prepared by Technical Committee ISO/TC 213, *Dimensional and geometrical product specifications and verification*, in collaboration with Technical Committee CEN/TC 290, *Dimensional and geometrical product specification and verification*.

This third edition cancels and replaces the second edition (ISO 14253-1:2013), which has been technically revised with the following changes:

— The content applies ISO/IEC Guide 98-4 and gives recommendation for simplification by using intervals representing the underlying probability. As a consequence, the default coverage factor $k = 2$ has been replaced with a default conformance probability of 95 %. This makes the risk constant, regardless of the relationship between the specification interval and the measurement uncertainty. See Annex A for additional information.

— Some terminology has been updated.

— The explanation for the population specification modifier has been removed and can now be found in ISO 18391.

A list of all parts in the ISO 14253 series can be found on the ISO website.

Introduction

This document is a geometrical product specifications (GPS) standard and is to be regarded as a general GPS standard (see ISO 14638). It influences the chain link D of all chains of general GPS standards.

The ISO/GPS Matrix model given in ISO 14638 gives an overview of the ISO/GPS system of which this document is a part. The fundamental rules of ISO/GPS given in ISO 8015 apply to this document and the default decision rules given in this document apply in ISO/GPS, unless otherwise indicated.

For more detailed information on the relation of this document to other standards and the GPS matrix model, see Annex B for additional information.

The estimated measurement uncertainty is to be taken into account when verifying conformity or nonconformity with specification.

The problem arises when a measured value falls close to the upper or lower specification limit. In this case, verification of conformity or nonconformity with specifications is not possible: the measurement uncertainty induces a probability that a true value of the characteristic is out of specification even if the measured value falls inside the specification zone, or is in specification even if the measured value falls outside.

Therefore, suppliers and customers should agree in advance in a method to resolve any issues that may arise. This document explains how to define default acceptance and rejection zones (i.e. decision rules) for verifying conformity or nonconformity with specifications.

It is not the intention of this document to consider any prior knowledge of the possible values of the measurand(s), e.g. the variability of the measured objects, which may influence the probability of making the correct decision on verification [in mathematical terms, an a priori unconstrained maximum entropy distribution (12) is assumed].

Geometrical product specifications (GPS) — Inspection by measurement of workpieces and measuring equipment —

Part 1: Decision rules for verifying conformity or nonconformity with specifications

1 Scope

This document establishes the rules for verifying the conformity or nonconformity with a given tolerance for a characteristic of a workpiece (or a population of workpieces) or with a given maximum permissible errors for a metrological characteristic of a measuring equipment, including when the measured value falls close to the specification limits, taking measurement uncertainty into account.

This document applies to specifications defined in general GPS standards (see ISO 14638), i.e. standards prepared by ISO/TC 213, including:

— workpiece specifications and population specifications (usually given as an upper specification limit or a lower specification limit or both);

— measuring equipment specifications (usually given as maximum permissible errors).

This document only applies for characteristics and maximum permissible errors expressed as quantity values.

2 Normative references

The following documents are referred to in the text in such a way that some or all of their content constitutes requirements of this document. For dated references, only the edition cited applies. For undated references, the latest edition of the referenced document (including any amendments) applies.

ISO 3534-2, *Statistics — Vocabulary and symbols — Part 2: Applied statistics*

ISO 9000, *Quality management systems — Fundamentals and vocabulary*

ISO/IEC Guide 98-3, *Uncertainty of measurement — Part 3: Guide to the expression of uncertainty in measurement (GUM:1995)*

ISO/IEC Guide 98-4, *Uncertainty of measurement — Part 4: Role of measurement uncertainty in conformity assessment*

ISO/IEC Guide 99, *International vocabulary of metrology — Basic and general concepts and associated terms (VIM)*

3 Terms and definitions

For the purposes of this document, the terms and definitions given in ISO 3534-2, ISO 9000, ISO/IEC Guide 98-3, ISO/IEC Guide 98-4 and ISO/IEC Guide 99 and the following apply.

ISO and IEC maintain terminological databases for use in standardization at the following addresses:

— ISO Online browsing platform: available at http://www.iso.org/obp

— IEC Electropedia: available at http://www.electropedia.org/

NOTE 1 "Probability density function (PDF)" is defined in ISO 3534-1.

NOTE 2 "Specification limit", "upper specification limit (USL)", "lower specification limit (LSL)", "specified tolerance" and "population" are defined in ISO 3534-2.

NOTE 3 "Maximum permissible measurement error", "measurement uncertainty", "standard measurement uncertainty", "combined standard measurement uncertainty", "coverage interval" and "coverage probability" are defined in ISO/IEC Guide 99.

NOTE 4 "Acceptance limit", "acceptance interval", "rejection interval", "conformance probability" and "guard band" are defined in ISO/IEC Guide 98-4.

NOTE 5 "Conformity" and "nonconformity" are defined in ISO 9000.

NOTE 6 For the purposes of this document, "characteristic" is used to express either a workpiece characteristic, a workpiece population characteristic, or a metrological characteristic of measuring equipment. Because conformity assessment involves measurement, these characteristics are also referred to as measurands.

3.1
specification zone
interval of values, of the workpiece characteristic or population characteristic or the maximum permissible error (MPE) of a metrological characteristic of a measuring equipment, fulfilling the specification

Note 1 to entry: A specification refers to or includes drawings, patterns or other relevant documents.

3.2
conformance probability limit
agreed minimum value of conformance probability when verifying conformity

Note 1 to entry: The conformance probability limit effectively sets the criterion for acceptance when verifying conformity.

Note 2 to entry: A conformance probability limit of p corresponds to a risk of false acceptance less than or equal to $(1 - p)$.

3.3
default conformance probability limit
conformance probability limit (3.2) set by this document as default

3.4
lower nonconformance probability
probability that a value of a characteristic is below the lower specification limit

Note 1 to entry: A lower nonconformance probability exists only if a lower specification limit exists.

Note 2 to entry: Conformance probability, lower nonconformance probability and upper nonconformance probability sum up to unity.

3.5
upper nonconformance probability
probability that a value of a characteristic is above the upper specification limit

Note 1 to entry: An upper nonconformance probability exists only if an upper specification limit exists.

Note 2 to entry: Conformance probability, lower nonconformance probability and upper nonconformance probability sum up to unity.

3.6
nonconformance probability limit
agreed minimum value of either the *upper nonconformance probability* (3.5) or the *lower nonconformance probability* (3.4) when verifying nonconformity

Note 1 to entry: The nonconformance probability limit effectively sets the criterion for rejection when verifying nonconformity.

Note 2 to entry: A nonconformance probability limit of p implies a risk of false rejection not exceeding $(1 - p)$.

3.7
default nonconformance probability limit
nonconformance probability limit (3.6) set by this document as default

3.8
acceptance zone
set of one or more acceptance intervals

3.9
default acceptance zone
acceptance zone (3.8) based on the *default conformance probability limit* (3.3)

Note 1 to entry: See Figure 1.

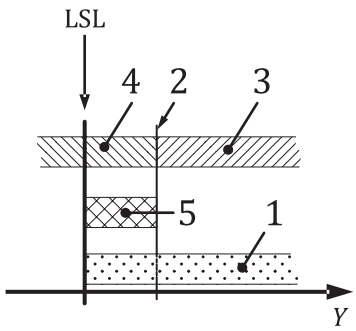

a) Specification defined only by a lower specification limit

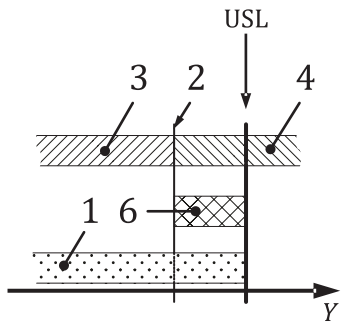

b) Specification defined only by an upper specification limit

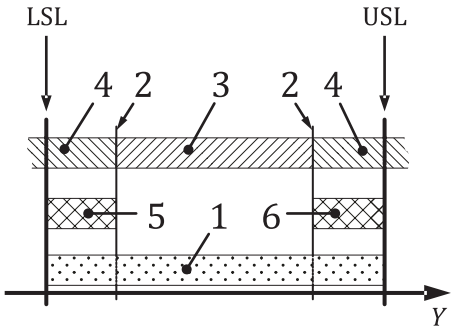

c) Specification defined by a lower and an upper specification limit

Key

1 specification zone
2 acceptance limits
3 acceptance zone
4 rejection zone
5 guard band g_{LA} at lower specification limit
6 guard band g_{UA} at upper specification limit
Y value of characteristic
LSL lower specification limit
USL upper specification limit

NOTE In most cases, the probability density function (PDF) associated with the measured value of the characteristic is considered to be symmetrical, so that g_{UA}, g_{LA} have the same width.

Figure 1 — Acceptance zone and rejection zone when verifying conformity

3.10
rejection zone
set of one or more rejection intervals

Note 1 to entry: The rejection zone is the complement to the *acceptance zone* (3.8).

3.11
default rejection zone
rejection zone (3.10) based on the *default nonconformance probability limit* (3.7).

Note 1 to entry: See Figure 2.

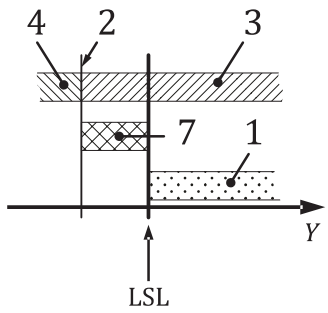

a) Specification defined only by a lower specification limit

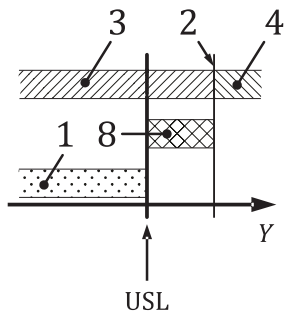

b) Specification defined only by an upper specification limit

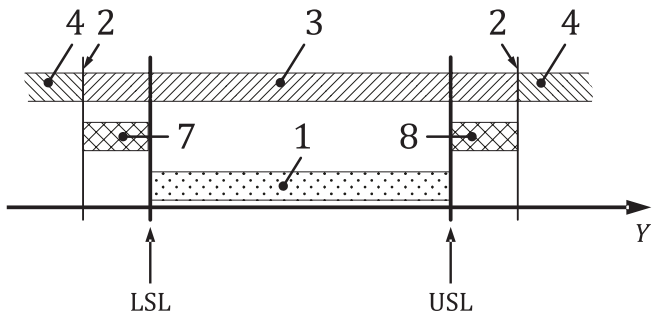

c) Specification defined by a lower and an upper specification limit

Key

1 specification zone
2 acceptance limits
3 acceptance zone
4 rejection zone
7 guard band g_{LR} at lower specification limit
8 guard band g_{UR} at upper specification limit
Y value of characteristic
LSL lower specification limit
USL upper specification limit

NOTE In most cases, the probability density function (PDF) associated with the measured value of the characteristic is considered to be symmetrical, so that g_{UR}, g_{LR} have the same width.

Figure 2 — Rejection zone and acceptance zone when verifying nonconformity

3.12
uncertainty zone
set of interval(s) close to the specification limit(s) where neither conformity can be verified according to the *conformance probability limit* (3.2) nor nonconformity can be verified according to the *nonconformance probability limit* (3.6)

Note 1 to entry: The uncertainty zone is located about the specification limit (unilateral specification) or specification limits (bilateral specification).

Note 2 to entry: The uncertainty zone on the upper and lower side of a specification limit may be of different magnitudes.

Note 3 to entry: When verifying conformity, the uncertainty zone is part of the *rejection zone* (3.10) and not part of the *acceptance zone* (3.8).

Note 4 to entry: When verifying nonconformity, the uncertainty zone is part of the *acceptance zone* (3.8) and not part of the *rejection zone* (3.10).

Note 5 to entry: See Figure 3, Figure 4, Figure 5 and Figure 6.

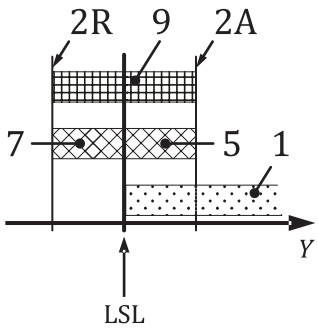

a) Specification defined only by a lower specification limit

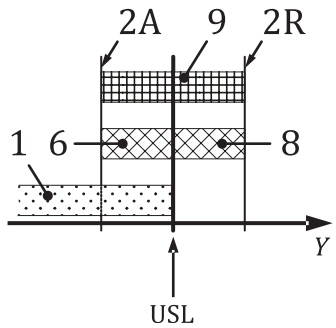

b) Specification defined only by an upper specification limit

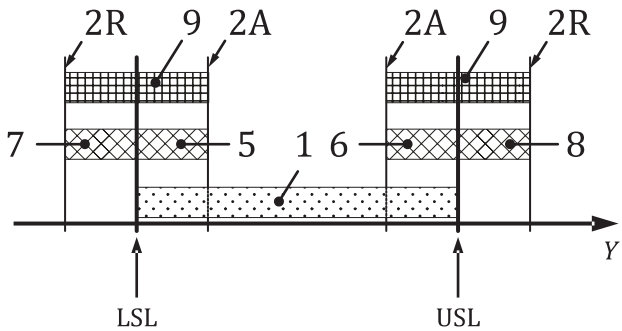

c) Specification defined by a lower and an upper specification limit

Key

1 specification zone
2A acceptance limits for verifying conformity
2R acceptance limits for verifying nonconformity
5 guard band g_{LA} at lower specification limit for verifying conformity
6 guard band g_{UA} at upper specification limit for verifying conformity
7 guard band g_{LR} at lower specification limit for verifying nonconformity
8 guard band g_{UR} at upper specification limit for verifying nonconformity
9 uncertainty zone
Y value of characteristic
LSL lower specification limit
USL upper specification limit

NOTE 1 Figure 3 c) could be seen as a combination of Figure 3 a) and Figure 3 b).

NOTE 2 In most cases, the probability density function (PDF) associated with the measured value of the characteristic is considered to be symmetrical, so that g_{UA}, g_{LA} and g_{UR}, g_{LR} have the same width.

Figure 3 — Uncertainty zone

4 Default decision rules

4.1 General

A given specification (workpiece(s) characteristic with LSL and/or USL) is expressed on the drawing and the respective chain of standards (see ISO 14638) or by the detailed description of the metrological characteristic of the measurement equipment (e.g. in a standard) and the maximum permissible error (MPE) of the indicated value.

Any measurement is affected by measurement uncertainty: the true value cannot be known exactly and is expected to fall, with a predefined coverage probability, within a coverage interval.

NOTE 1 For guidance on how to estimate the measurement uncertainty, follow GUM or ISO 14253-2.

NOTE 2 The uncertainty of the estimate of a workpiece characteristic is different from the uncertainty of the estimate of the population characteristic (e.g. the uncertainty of an individual value is different from the uncertainty of an average value).

The central tendency and dispersion of values that can be reasonably attributed to the measurand are often modelled with a probability density function (PDF).

Often, the PDF is assumed to be Gaussian (normally distributed). In this case, a coverage probability of 95 % corresponds to a coverage factor k = 1,96, typically approximated to k = 2. It is common practice to assume symmetrical coverage intervals about the measured values; however, asymmetric intervals are also possible, which are acceptable, as long as the coverage probability is met.

As measured values include uncertainty, any decision based on them is subject to a risk of being false. The conformance probability is the probability that the true value falls inside the specification zone. Setting a decision rule such that an item is accepted if the conformance probability is above a conformance probability limit (e.g. 95 %) effectively confines the risk of false decision to the complement of such conformance probability limit (e.g. 5 %).

Conformance probability should not be confused with coverage probability; see Clause 3.

Guard bands protect from incorrect decisions based on uncertain measured values close to the specification limits.

The guard bands are fully determined by the PDF of the result of the measurement and the agreed probability limit.

The acceptance zone for guarded acceptance is determined by reducing the specification zone of a workpiece or population characteristic or the maximum permissible error of a measuring equipment characteristic by the guard bands at each specification limit; see Figure 1. The figure also shows the rule for unilateral characteristics. Conformity is verified if the measured value falls into the acceptance zone.

The acceptance zone for a given specification zone and either the conformance probability limit or the nonconformance probability limit differs depending on whether conformity or nonconformity is being verified; see Figures 4 to 6.

When verifying conformity, the acceptance zone is the zone of possible measured values for which there exists a coverage interval with a coverage probability equal to the conformance probability limit that is completely inside the specification zone.

When verifying nonconformity, the acceptance zone is the zone of possible measured values for which there does not exist a coverage interval with a coverage probability equal to the nonconformance probability limit that is either completely above or completely below the specification zone.

When verifying conformity, the acceptance zone can be viewed in two ways:

— the conformance probability, i.e. the integral of the PDF over the specification zone, is not less than agreed, or

— there exists a coverage interval with a coverage probability equal to the conformance probability limit that is completely inside the specification zone.

NOTE 3 The conformance probability is the integral of the PDF over the specification zone.

The rejection zone for guarded rejection is determined by enlarging the specification zone or maximum permissible error by the guard bands at each specification limit; see Figure 2. The figure also shows the rule for characteristics with unilateral specifications. Nonconformity is verified if the measured value falls into the rejection zone.

The rejection zone for given specification zone and either conformance probability limit or nonconformance probability limit differs depending on whether conformity or nonconformity is being verified.

When verifying nonconformity, the rejection zone can be viewed in two ways:

— either the upper nonconformance probability or the lower nonconformance probability is not less than agreed, or

— there exists a coverage interval with a coverage probability equal to the nonconformance probability limit that is either completely above or completely below the specification zone.

NOTE 4 The upper nonconformance probability is the integral of the PDF over the zone above the specification zone and the lower nonconformance probability is the integral of the PDF over the zone below the specification zone.

When verifying conformity, the rejection zone is the zone for which there does not exist a coverage interval with a coverage probability equal to the conformance probability limit that is completely inside the specification zone.

Verifying conformity is then reduced to whether a measurement falls either into the acceptance zone or into the rejection zone. The same applies for verifying nonconformity.

The acceptance zone and the rejection zone are a function of the guard bands and the specification zone. Consequently, the acceptance zone and the rejection zone may vary even if the specification remains the same.

Figures 4 to 6 illustrate the transition from specification phase, where no uncertainty is involved, to the verification phase, where the uncertainty imposes guard bands. For simplicity, only bilateral specifications are illustrated.

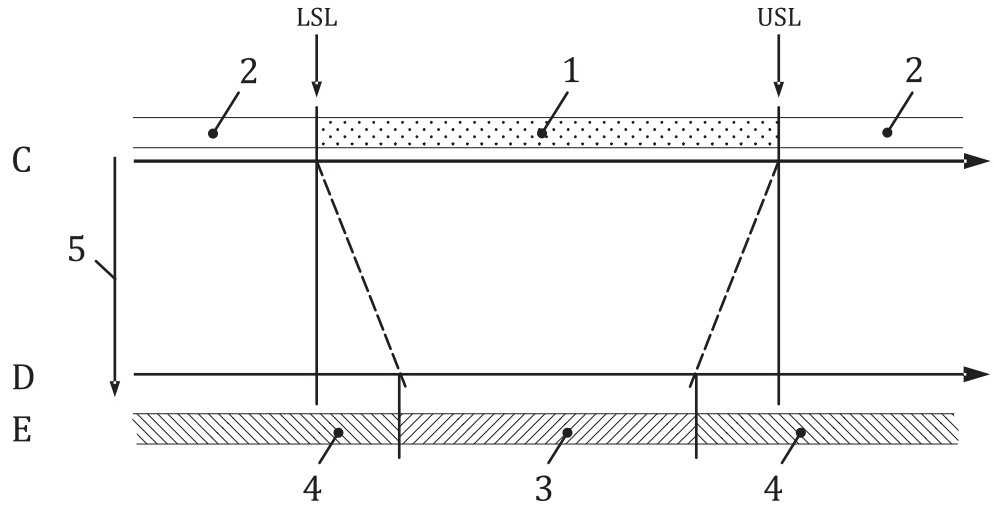

Key

C design/specification phase
D verification phase for a particular measurement uncertainty
E verifying conformity (see 5.2)
1 specification zone
2 outside the specification zone
3 acceptance zone (when verifying conformity)
4 rejection zone (when verifying conformity)
5 increasing measurement uncertainty reduces the acceptance zone
LSL lower specification limit
USL upper specification limit

Figure 4 — Measurement uncertainty reduces the zone where conformity can be verified

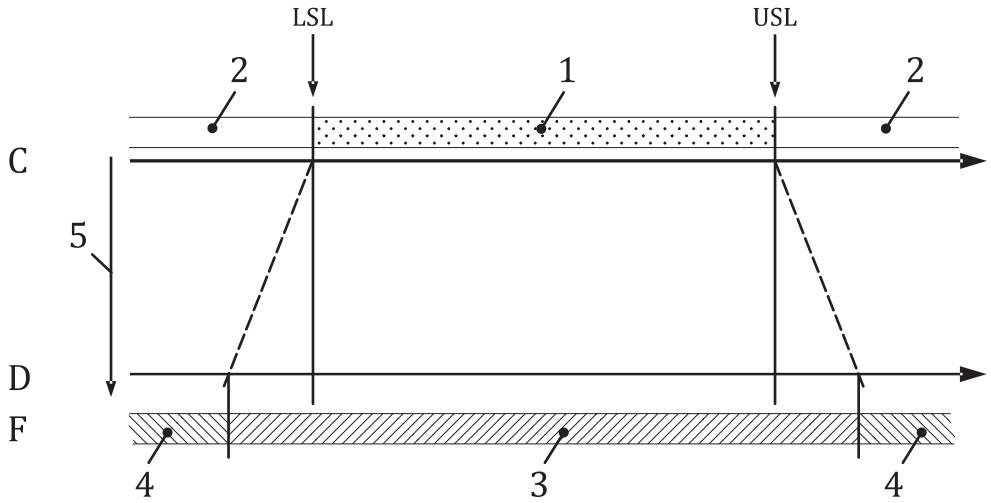

Key

C design/specification phase
D verification phase for a particular measurement uncertainty
F verifying nonconformity (see 5.3)
1 specification zone
2 outside the specification zone
3 acceptance zone (when verifying nonconformity)
4 rejection zone (when verifying nonconformity)
5 increasing measurement uncertainty reduces the rejection zone
LSL lower specification limit
USL upper specification limit

Figure 5 — Measurement uncertainty reduces the zone where nonconformity can be verified

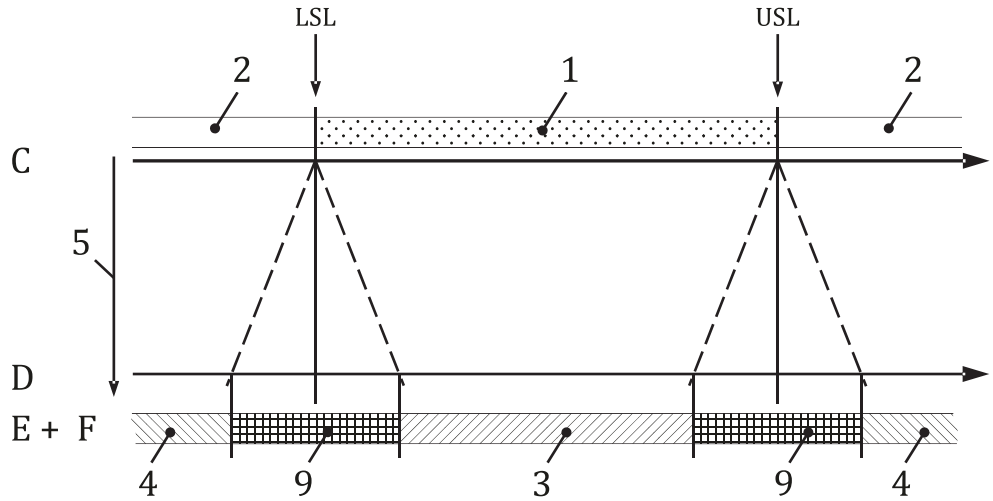

Key

C design/specification phase
D verification phase for a particular measurement uncertainty
E verifying conformity (see 5.2)
F verifying nonconformity (see 5.3)
1 specification zone
2 outside the specification zone
3 zone where conformity is verified
4 zone where nonconformity is verified
5 increasing measurement uncertainty reduces both the acceptance and rejection zones
9 uncertainty zone
LSL lower specification limit
USL upper specification limit

Figure 6 — Measurement uncertainty influences the zones where conformity or nonconformity can be verified

4.2 Default conformance probability limit

The conformance probability limit is 95 % by default. Parties may agree on a different limit (see Clause 6). The agreement shall be recorded in writing, e.g. in the contract or technical drawings.

4.3 Default nonconformance probability limit

The nonconformance probability limit is 95 % by default. Parties may agree on a different limit (see Clause 6). The agreement shall be recorded in writing, e.g. in the contract or technical drawings.

NOTE The default conformance probability limit and the default nonconformance probability limit are not complementary, i.e. do not sum up to 100 %. They apply to different circumstances.

5 Verifying conformity and nonconformity with specifications

5.1 General

Verifying conformance or nonconformance applies for workpiece characteristics, population characteristics and metrological characteristics. In this clause, only workpiece characteristics are described, but the concept can be applied similarly to the others as well.

5.2 Rule for verifying conformity with specifications

5.2.1 General

Conformity with a specification is verified when the measured value falls within the acceptance zone. The acceptance zone is the specification zone reduced by the guard bands, considering the conformance probability limit.

5.2.2 Case of normal PDF and default conformance probability limit

If the probability density function of the measured values is normally distributed with a standard deviation significantly smaller than the size of the specification zone, the default conformance probability limit of 95 % corresponds to a guard band factor of 1,65, equivalent to a guard band width 1,65 times the combined standard uncertainty (see Figure 7).

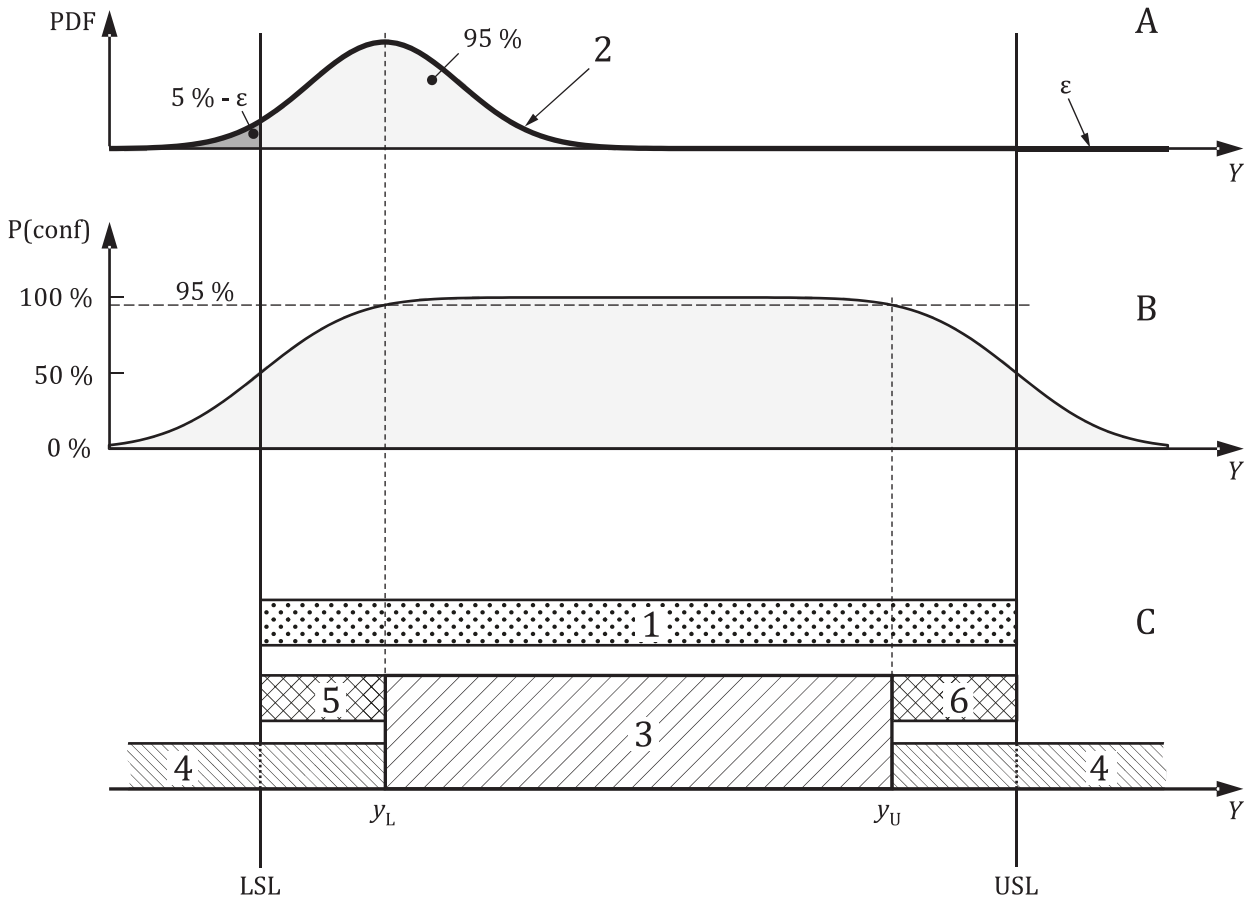

Key

A PDF of measured value y_L = LSL + g_{LA}
B conformance probability
C acceptance zone when verifying conformity
1 specification zone
2 probability density function of a measured value at LSL + g_{LA}
3 default acceptance zone
4 default rejection zone
5 guard band g_{LA} at lower specification limit
6 guard band g_{UA} at upper specification limit
y_L smallest measured value for which conformity can be verified
y_U largest measured value for which conformity can be verified
Y measured values
LSL lower specification limit
USL upper specification limit
ε infinitesimal rest

Figure 7 — Verifying conformity with specification

5.3 Rule for verifying nonconformity with specifications

5.3.1 General

Nonconformity with a specification is verified when the measured value falls within the rejection zone. The rejection zone is the complement of the specification zone expanded by the guard bands considering the nonconformance probability limit.

5.3.2 Case of normal PDF and default nonconformance probability limit

If the probability density function of the measurement result is normally distributed, the default nonconformance probability limit of 95 % results in a coverage factor of 1,65, equivalent to guard bands 1,65 times the combined standard uncertainty (see Figure 8).

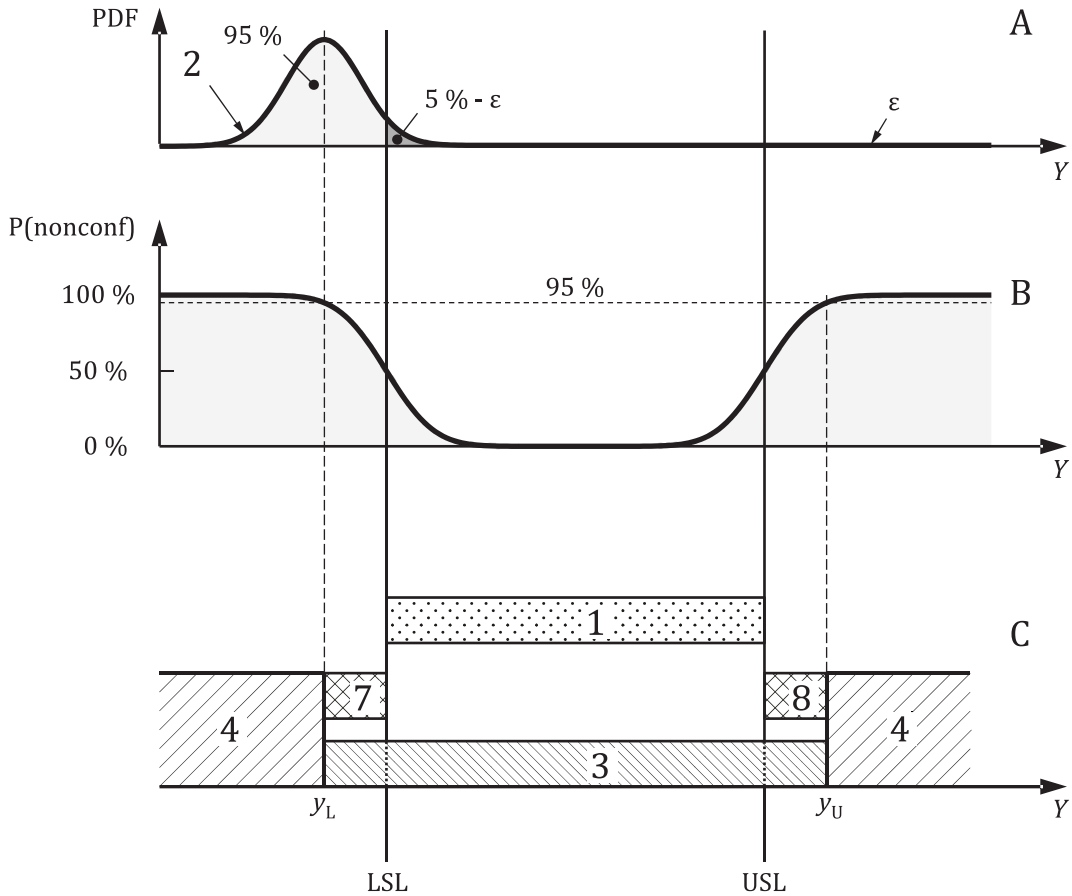

Key

A	PDF of measured value y_L = LSL − g_{LR}
B	nonconformance probability
C	guard bands for verifying nonconformity
1	specification zone
2	probability density function of a measured value at LSL − g_{LR}
3	default acceptance zone
4	default rejection zone
7	guard band g_{LR} at lower specification limit
8	guard band g_{UR} at upper specification limit
y_L	largest measured value below LSL, for which nonconformity can be verified
y_U	smallest measured value above USL, for which nonconformity can be verified
Y	measured values
LSL	lower specification limit
USL	upper specification limit
ε	infinitesimal rest

Figure 8 — Verifying nonconformity with specification

5.4 Uncertainty zone

If a measurement value falls into the uncertainty zone (i.e. in one of the guard bands), then workpieces are either rejected, when verifying conformity, or accepted, when verifying nonconformity with a specification (see Figure 9).

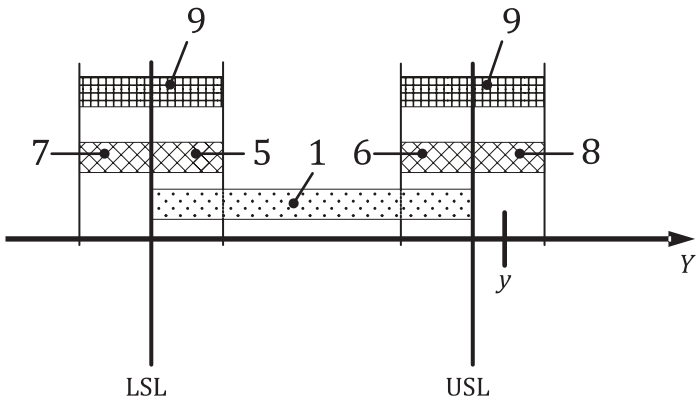

Key

1 specification zone
5 guard band g_{LA} at lower specification limit for verifying conformity
6 guard band g_{UA} at upper specification limit for verifying conformity
7 guard band g_{LR} at lower specification limit for verifying nonconformity
8 guard band g_{UR} at upper specification limit for verifying nonconformity
9 uncertainty zone
y measured value
LSL lower specification limit
USL upper specification limit

Figure 9 — Uncertainty zone

6 Application in a supplier/customer relationship

6.1 General

The rules given in this document apply if no previous agreement has been made between the supplier and the customer.

The principle behind the rules is the following: the measurement uncertainty always counts against the party who is verifying conformity or nonconformity and therefore making the measurement.

NOTE 1 Reducing the magnitude of the measurement uncertainty benefits the party who is verifying.

NOTE 2 The above principle applies regardless of whether the verifying party performs the measurements in-house or contracts a third-party laboratory to perform the measurements.

These rules also apply to internal customer/supplier relationships and to re-verification.

6.2 Supplier verifying conformity

The supplier shall verify conformity in accordance with 5.2 using their estimated measurement uncertainty.

NOTE It is customary that the supplier provides proof of conformity with specifications for all workpieces or measuring equipment delivered.

6.3 Customer verifying nonconformity

The customer shall verify nonconformity in accordance with 5.3 using their estimated measurement uncertainty.

NOTE A reseller is first customer and then supplier of the same workpieces or measuring equipment. A reseller can be in the situation where neither conformity to the customer nor at the same time nonconformity to the supplier can be verified, i.e. the measuring results fall within the uncertainty zone. To avoid this situation, a reseller might consider using the result of the verification provided by his supplier to verify conformity to the customer.

Annex A
(informative)

Relation between the third edition and the second edition

This edition of this document concentrates on a conformance probability rather than a coverage probability (referred to as the "old method" in the following text) as described in the previous two editions of this document (1998 and 2013) and also explained in ISO/IEC Guide 98-4. The use of fixed coverage factor guard bands, as used in the old method, can lead to an unnecessary increase in the cost of production. This annex illustrates the differences between the new and the old method.

The old method was based on a default coverage factor of k = 2, which is approximately equivalent to the default coverage probability of 95 % for a Gaussian PDF.

The following discussions consider a coverage probability of 95 % and a normally distributed probability density function and compare it with a conformance probability of 95 %, as introduced in this third edition of this document.

In the exceptional case (for a bilateral specification), where the acceptance interval is only a single value in the centre of the specification zone, the two methods coincide (see Figure A.1).

NOTE The coverage probability for a coverage factor of k = 2 is 95,45 %, while the coverage factor for a coverage probability of 95 % is k = 1,96.

The measurement at the centre of the specification zone has 2,5 % probability that the true value is above the upper specification limit (USL) and 2,5 % probability that the value is below the lower specification limit (LSL) and therefore the conformance probability is 95 %.

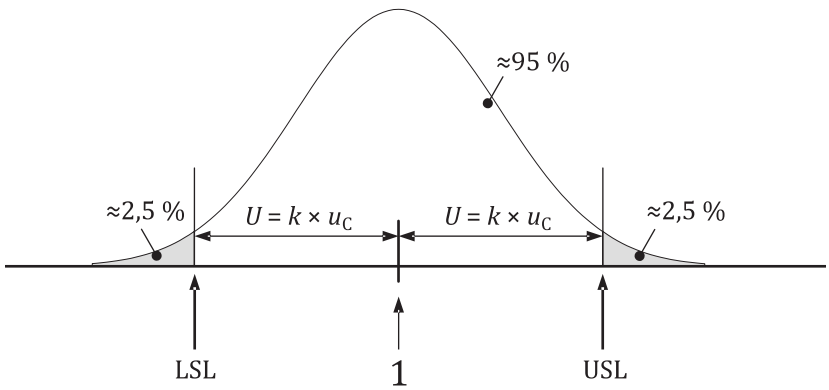

Key

1 singular acceptance interval

LSL lower specification limit

USL upper specification limit

Figure A.1 — Verification of conformity if the width of the specification zone is 3,92 × u_C (old method: 4 × u_C)

When (USL − LSL)/u_C increases above 4, the acceptance zone is no longer a single value, and the difference between the two methods becomes more significant. If the acceptance zone is calculated by removing 1,96 × u_C at the upper and lower end of the specification zone, then, for a measured value at either acceptance limit, the nonconformance probability will decrease with decreasing uncertainty of measurement. For example, if (USL − LSL)/u_C = 4,25, a measured value at LSL + 1,96 × u_C results in the lower nonconformance probability of 2,5 % and an upper nonconformance probability of 1,22 %.

Therefore, the conformance probability according to the old method is 96,28 % instead of the desired 95 %, which also unnecessarily increases the cost of production [see Figure A.2 a)].

Aiming for a conformance probability of 95 % means that a valid coverage interval can be located asymmetrically with respect to the possible measured value (k1 ≠ k2) to create the acceptance zone, which fulfils the requirement of 95 % conformance probability [see Figure A.2 b)].

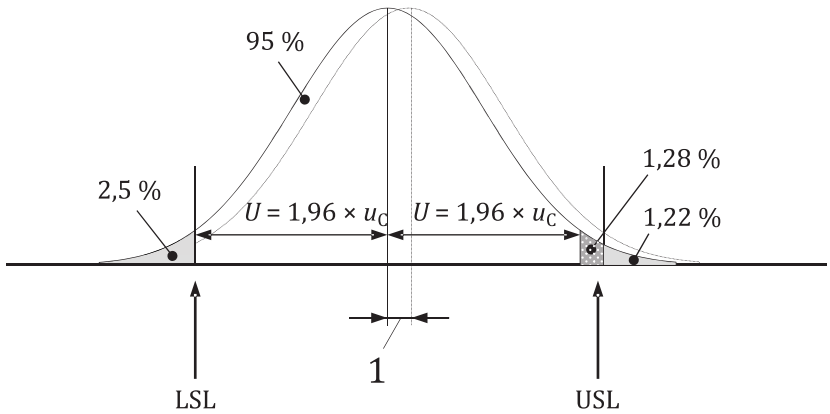

a) Old method

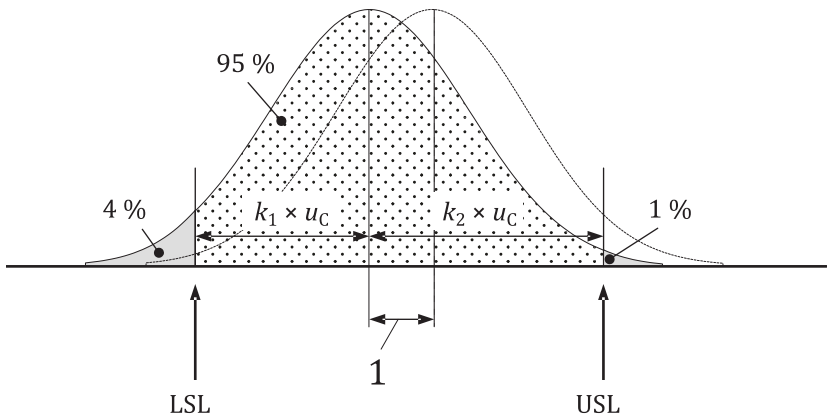

b) New method

Key

1 acceptance zone

LSL lower specification limit

USL upper specification limit

Figure A.2 — Verification of conformity if the width of the specification zone is 4,25 × u_C

The common case, where (USL − LSL) >> u_C, is shown in Figure 7.

Figure A.3 shows how for a conformance probability of 95 % the guard band factor approaches to 1,65, when the uncertainty decreases relative to the width of the specification zone, which means that only on one side of the probability distribution the 5 % risk for false decision needs to be considered.

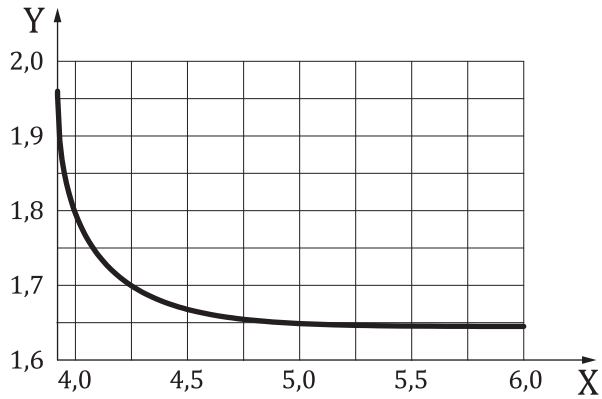

Key

X (USL − LSL)/u_C

Y guard band factor g

NOTE The maximum value for g is 1,96, which applies when (USL − LSL)/u_C is equal to 2 × 1,96 = 3,92.

Figure A.3 — Guard band factor g for a coverage probability of 95 % as a function of the ratio between the width of the specification zone and the combined measurement uncertainty u_C

Annex B
(informative)

Relation to the GPS matrix model

B.1 General

For full details about the GPS matrix model, see ISO 14638.

The ISO/GPS Masterplan given in ISO 14638 gives an overview of the ISO/GPS system of which this document is a part. The fundamental rules of ISO/GPS given in ISO 8015 apply to this document and the default decision rules given in this document apply in ISO/GPS, unless otherwise indicated.

B.2 Information about this document and its use

This document provides rules for:

— verifying conformity with GPS specification for workpieces and measuring equipment taking into account the estimated measurement uncertainty;

— verifying nonconformity with GPS specification for workpieces and measuring equipment taking into account the estimated measurement uncertainty;

— dealing with situations where neither conformity nor nonconformity with GPS specification can be verified.

In this document, the measurement uncertainty is estimated according to the GUM and ISO 14253-2 and expressed as the expanded measurement uncertainty.

B.3 Position in the matrix model

This document is a general GPS standard, which influences the chain links D of all chains of standards in the general GPS matrix, as graphically illustrated in Table B.1.

Table B.1 — ISO/GPS standards matrix model

	Chain links						
	A	B	C	D	E	F	G
	Symbols and indications	Feature requirements	Feature properties	Conformance and non-conformance	Measurement	Measurement equipment	Calibrations
Size				•			
Distance				•			
Form				•			
Orientation				•			
Location				•			
Run-out				•			
Profile surface texture				•			
Areal surface texture				•			
Surface imperfections				•			

B.4 Related standards

The related International Standards are those of the chains of standards indicated in Table B.1.

Bibliography

[1] ISO 1938-1, *Geometrical product specifications (GPS) — Dimensional measuring equipment — Part 1: Plain limit gauges of linear size*

[2] ISO 3534-1, *Statistics — Vocabulary and symbols — Part 1: General statistical terms and terms used in probability*

[3] ISO 8015, *Geometrical product specifications (GPS) — Fundamentals — Concepts, principles and rules*

[4] ISO 14253-2, *Geometrical product specifications (GPS) — Inspection by measurement of workpieces and measuring equipment — Part 2: Guidance for the estimation of uncertainty in GPS measurement, in calibration of measuring equipment and in product verification*

[5] ISO 14638, *Geometrical product specifications (GPS) — Matrix model*

[6] ISO 25378, *Geometrical product specifications (GPS) — Characteristics and conditions — Definitions*

[7] Jaynes E.T. "Prior probabilities." *IEEE Transactions on systems science and cybernetics* 4.3 (1968)

ICS 17.040.40
Price based on 23 pages